ai1676289420154_Reducer_RD010323.pdf 1 2023/02/13 13:57

CCG CABLE TERMINATIONS

REDUCER

Ex db, Ex eb, Ex ta , Ex nR, IP65/66/68

for General Industrial and Hazardous Area Installations

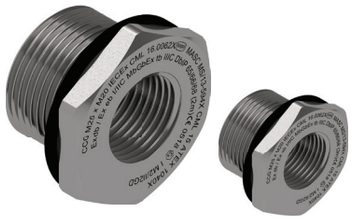

Features and Benefits

- Precision manufactured from high quality brass (Marine Grade Electroless Nickel Plated™), aluminium or stainless steel 316/316L. (Note: Aluminium not suitable for Group I applications.)
- Converts mismatching threads to the required thread.

Technical Data

Type:	Reducer
Material:	Brass (Marine Grade Electroless Nickel Plated™), Aluminium, Stainless Steel 316/316L
Gasket material:	Standard HDPE or Extreme Temp. PTFE
Note:	The installer should check that the materials are suitable for the installation environment.

Standards and Certifications

Equipment Protection Levels:	IECEx/INMETRO: Ex db I Mb / Ex eb I Mb / Ex db IIC Gb / Ex eb IIC Gb / Ex ta IIIC Da / Ex nR IIC ATEX/UKEX: Ⓔx I M2 Ex db I Mb / Ex eb I Mb, Ⓔx II 2G 1D Ex db IIC Gb / Ex eb IIC Gb / Ex ta IIIC Da TR CU: 1Ex d IIC Gb X / PB Ex d I Mb X / 1Ex e IIC Gb X / РП Ex e I Mc X / Ex tb IIIC Db X	
Conformance:	Standard:	Certificate:
IECEx	IEC 60079 Part 0, 1, 7, 15, 31 IEC 60079 Part 0, 1, 7, 31	IECEx CML 16.0062X IECEx ITA 13.0005X
ATEX	EN 60079 Part 0, 1, 7, 31	CML 15ATEX1040X
UKEX	BS EN 60079 Part 0, 1, 7, 31	CML 21UKEX1014X
INMETRO (Brazil)	ABNT NBR IEC 60079 Part 0, 1, 7, 31	TÜV 15.0485X
TR CU (Russia)	ГОСТ 31610-0, 15, ГОСТ IEC 60079-1 ГОСТ Р МЭК 60079-7, 31	ЕАЭС RU C-ZA.HA91.B.00244/21
CNEx (Chinese)	GB 3836.1, GB3936.2, GB3836.3 GB12476.1, GB12476.5	CNEx 21.3391X, CNEx CCC 2021312313000391
KCS (Korea)	Notification of Ministry of Labour No. 2013-54	16-AV4BO-0439-42X
SANS/IEC	IEC 60079 Part 0, 1, 7, 31 IEC 60529	MASC MS/13-594X
IP66/68 2m - Parallel IP65/66 - Tapered	IEC 60529 IEC 60529	CML15Y728
Deluge Protection	DTS-01	CML 14CA370-2
Corrosion Protection	ASTM B117-11, BS EN ISO 3231	EXOVA N968667
Marine ABS	IEC 60079 Part 0, 1, 7, 15, 31, IEC 60529	ABS 20-SG1952706-1-PDA
DNV-GL	IEC 60079 Part 0, 1, 7, IEC 60529	DNV-GL TAE0000010
ClassNK	IEC 60079 Part 0, 1, 7, 15, 31	TA20272M
London Underground Approval	BS EN 62444	LU 3043, LU 3044

Conditions and limitations for Safe Use - X

- An IP rating of IP66/68 is maintained for units with parallel threads when used with the supplied washer and for units with tapered thread when thread sealant is conducted as indicated in IEC 60079-14. Alternatively an IP65 rating is applicable.
- Operating temperature range -60°C to +95°C (HDPE gasket), -60°C to +100°C (nylon gasket) or -60°C to +160°C (PTFE gasket) is applicable if the gaskets are utilized to maintain an IP rating IP65/66/68 2m continued.
- A blanking element may not be installed on an Reducer.
- When the equipment with metric male thread and with the sealing washer fitted is intended for use / interface in threaded holes in a flame-proof enclosure the applicable thread engagement must be achieved after the washer has been fitted. Thread engagement shall be at least five full threads.

2023 © CCG CABLE TERMINATIONS (PTY) LTD

CCG reserves the right to make alterations to the technical data, dimensions, designs and products available without notice. The illustrations cannot be considered binding. Please contact CCG for assistance.

METRIC TO METRIC, NPT AND BSP REDUCER

CABLE TERMINATIONS

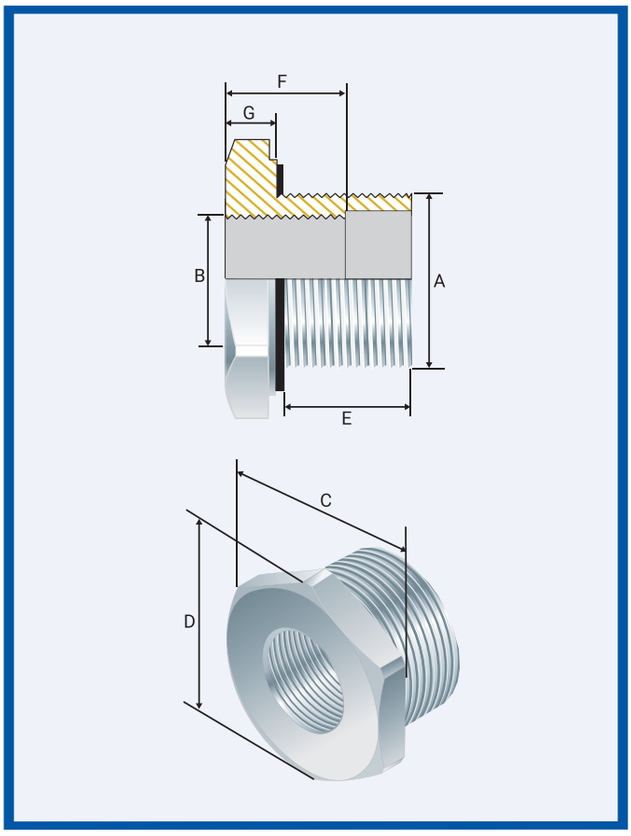

METRIC TO BSP

Product Code	Male Metric Thread "A"	Female BSP Thread "B"	Hex Across Flats Min "C"	Hex Across Corners Min "D"	Male Thread Depth Min "E"	Female Thread Depth Min "F"	Hex Length Min "G"
RM025B012	M25	½ BSP	32.0	36.0	15.0	16.0	6.0
RM032B012	M32	½ BSP	38.0	42.8	15.0	16.0	6.0
RM032B034	M32	¾ BSP	38.0	42.8	15.0	16.0	6.0
RM040B012	M40	½ BSP	38.0	42.8	15.0	16.0	6.0
RM040B034	M40	¾ BSP	47.0	52.9	15.0	16.0	6.0
RM040B001	M40	1 BSP	47.0	52.9	15.0	18.0	6.0
RM050B012	M50	½ BSP	47.0	52.9	15.0	16.0	6.0
RM050B034	M50	¾ BSP	55.0	61.9	15.0	16.0	6.0
RM050B001	M50	1 BSP	55.0	61.9	15.0	18.0	6.0
RM050B114	M50	1¼ BSP	55.0	61.9	15.0	18.0	6.0
RM063B012	M63	½ BSP	55.0	61.9	15.0	16.0	6.0
RM063B034	M63	¾ BSP	70.0	78.8	15.0	16.0	6.0
RM063B001	M63	1 BSP	70.0	78.8	15.0	18.0	6.0
RM063B114	M63	1¼ BSP	70.0	78.8	15.0	18.0	6.0
RM063B112	M63	1½ BSP	70.0	78.8	15.0	18.0	6.0
RM075B012	M75	½ BSP	70.0	78.8	15.0	16.0	6.0
RM075B034	M75	¾ BSP	70.0	78.8	15.0	16.0	6.0
RM075B001	M75	1 BSP	70.0	78.8	15.0	18.0	6.0
RM075B114	M75	1¼ BSP	70.0	78.8	15.0	18.0	6.0
RM075B112	M75	1½ BSP	80.0	90.0	15.0	18.0	6.0
RM075B002	M75	2 BSP	80.0	90.0	15.0	18.0	6.0
RM080B012	M80	½ BSP	85.0	95.6	20.0	16.0	6.0
RM080B034	M80	¾ BSP	85.0	95.6	20.0	16.0	6.0
RM080B001	M80	1 BSP	85.0	95.6	20.0	18.0	6.0
RM080B114	M80	1¼ BSP	85.0	95.6	20.0	18.0	6.0
RM080B112	M80	1½ BSP	85.0	95.6	20.0	18.0	6.0
RM080B002	M80	2 BSP	85.0	95.6	20.0	18.0	6.0
RM080B212	M80	2½ BSP	85.0	95.6	20.0	18.0	6.0
RM090B012	M90	½ BSP	96.0	108.0	20.0	16.0	6.0
RM090B034	M90	¾ BSP	96.0	108.0	20.0	16.0	6.0
RM090B001	M90	1 BSP	96.0	108.0	20.0	18.0	6.0
RM090B114	M90	1¼ BSP	96.0	108.0	20.0	18.0	6.0
RM090B112	M90	1½ BSP	96.0	108.0	20.0	18.0	6.0
RM090B002	M90	2 BSP	96.0	108.0	20.0	18.0	6.0
RM090B212	M90	2½ BSP	96.0	108.0	20.0	18.0	6.0
RM090B003	M90	3 BSP	96.0	108.0	20.0	18.0	6.0
RM100B012	M100	½ BSP	111.0	124.9	20.0	16.0	6.0
RM100B034	M100	¾ BSP	111.0	124.9	20.0	16.0	6.0
RM100B001	M100	1 BSP	111.0	124.9	20.0	18.0	6.0
RM100B114	M100	1¼ BSP	111.0	124.9	20.0	18.0	6.0
RM100B112	M100	1½ BSP	111.0	124.9	20.0	18.0	6.0
RM100B002	M100	2 BSP	111.0	124.9	20.0	18.0	6.0
RM100B212	M100	2½ BSP	111.0	124.9	20.0	18.0	6.0
RM100B003	M100	3 BSP	111.0	124.9	20.0	18.0	6.0
RM100B312	M100	3½ BSP	111.0	124.9	20.0	18.0	6.0

All dimensions except BSP are in mm.

METRIC TO NPT

Product Code	Male Metric Thread "A"	Female NPT Thread "B"	Hex Across Flats Min "C"	Hex Across Corners Min "D"	Male Thread Depth Min "E"	Female Thread Depth Min "F"	Hex Length Min "G"
RM025N012	M25	½ NPT	32.0	36.0	15.0	15.0	6.0
RM032N012	M32	½ NPT	38.0	42.8	15.0	15.0	6.0
RM032N034	M32	¾ NPT	38.0	42.8	15.0	15.0	6.0
RM040N012	M40	½ NPT	47.0	52.9	15.0	15.0	6.0
RM040N034	M40	¾ NPT	47.0	52.9	15.0	15.0	6.0
RM040N001	M40	1 NPT	47.0	52.9	15.0	18.0	6.0
RM050N012	M50	½ NPT	60.0	67.5	15.0	15.0	6.0
RM050N034	M50	¾ NPT	60.0	67.5	15.0	15.0	6.0
RM050N001	M50	1 NPT	60.0	67.5	15.0	18.0	6.0
RM050N114	M50	1¼ NPT	60.0	67.5	15.0	19.0	6.0
RM063N012	M63	½ NPT	70.0	78.8	15.0	15.0	6.0
RM063N034	M63	¾ NPT	70.0	78.8	15.0	15.0	6.0
RM063N001	M63	1 NPT	70.0	78.8	15.0	18.0	6.0
RM063N114	M63	1¼ NPT	70.0	78.8	15.0	19.0	6.0
RM063N112	M63	1½ NPT	70.0	78.8	15.0	19.0	6.0
RM075N012	M75	½ NPT	80.0	90.0	15.0	15.0	6.0
RM075N034	M75	¾ NPT	80.0	90.0	15.0	15.0	6.0
RM075N001	M75	1 NPT	80.0	90.0	15.0	18.0	6.0
RM075N114	M75	1¼ NPT	80.0	90.0	15.0	19.0	6.0
RM075N112	M75	1½ NPT	80.0	90.0	15.0	19.0	6.0
RM075N002	M75	2 NPT	80.0	90.0	15.0	19.0	6.0
RM080N012	M80	½ NPT	85.0	95.6	20.0	15.0	6.0
RM080N034	M80	¾ NPT	85.0	95.6	20.0	15.0	6.0
RM080N001	M80	1 NPT	85.0	95.6	20.0	18.0	6.0
RM080N114	M80	1¼ NPT	85.0	95.6	20.0	19.0	6.0
RM080N112	M80	1½ NPT	85.0	95.6	20.0	19.0	6.0
RM080N002	M80	2 NPT	85.0	95.6	20.0	19.0	6.0
RM080N212	M80	2½ NPT	85.0	95.6	20.0	25.0	6.0
RM090N012	M90	½ NPT	96.0	108.0	20.0	15.0	6.0
RM090N034	M90	¾ NPT	96.0	108.0	20.0	15.0	6.0
RM090N001	M90	1 NPT	96.0	108.0	20.0	18.0	6.0
RM090N114	M90	1¼ NPT	96.0	108.0	20.0	19.0	6.0
RM090N112	M90	1½ NPT	96.0	108.0	20.0	19.0	6.0
RM090N002	M90	2 NPT	96.0	108.0	20.0	19.0	6.0
RM090N212	M90	2½ NPT	96.0	108.0	20.0	25.0	6.0
RM090N003	M90	3 NPT	96.0	108.0	20.0	27.0	6.0
RM100N012	M100	½ NPT	111.0	124.9	20.0	15.0	6.0
RM100N034	M100	¾ NPT	111.0	124.9	20.0	15.0	6.0
RM100N001	M100	1 NPT	111.0	124.9	20.0	18.0	6.0
RM100N114	M100	1¼ NPT	111.0	124.9	20.0	19.0	6.0
RM100N112	M100	1½ NPT	111.0	124.9	20.0	19.0	6.0
RM100N002	M100	2 NPT	111.0	124.9	20.0	19.0	6.0
RM100N212	M100	2½ NPT	111.0	124.9	20.0	25.0	6.0
RM100N003	M100	3 NPT	111.0	124.9	20.0	27.0	6.0
RM100N312	M100	3½ NPT	111.0	124.9	20.0	29.0	6.0

All dimensions except NPT are in mm.

METRIC TO METRIC

Product Code	Male Metric Thread "A"	Female Metric Thread "B"	Hex Across Flats Min "C"	Hex Across Corners Min "D"	Male Thread Depth Min "E"	Female Thread Depth Min "F"	Hex Length Min "G"
RM020M016	M20	M16	27.0	30.4	15.0	15.0	6.0
RM025M016	M25	M16	32.0	36.0	15.0	15.0	6.0
RM025M020	M25	M20	32.0	36.0	15.0	15.0	6.0
RM032M016	M32	M16	38.0	42.8	15.0	15.0	6.0
RM032M020	M32	M20	38.0	42.8	15.0	15.0	6.0
RM032M025	M32	M25	38.0	42.8	15.0	15.0	6.0
RM040M016	M40	M16	47.0	52.9	15.0	15.0	6.0
RM040M020	M40	M20	47.0	52.9	15.0	15.0	6.0
RM040M025	M40	M25	47.0	52.9	15.0	15.0	6.0
RM040M032	M40	M32	47.0	52.9	15.0	15.0	6.0
RM050M016	M50	M16	55.0	61.9	15.0	15.0	6.0
RM050M020	M50	M20	55.0	61.9	15.0	15.0	6.0
RM050M025	M50	M25	55.0	61.9	15.0	15.0	6.0
RM050M032	M50	M32	55.0	61.9	15.0	15.0	6.0
RM050M040	M50	M40	55.0	61.9	15.0	15.0	6.0
RM063M016	M63	M16	70.0	78.8	15.0	15.0	6.0
RM063M020	M63	M20	70.0	78.8	15.0	15.0	6.0
RM063M025	M63	M25	70.0	78.8	15.0	15.0	6.0
RM063M032	M63	M32	70.0	78.8	15.0	15.0	6.0
RM063M040	M63	M40	70.0	78.8	15.0	15.0	6.0
RM063M050	M63	M50	70.0	78.8	15.0	15.0	6.0
RM075M016	M75	M16	80.0	90.0	15.0	15.0	6.0
RM075M020	M75	M20	80.0	90.0	15.0	15.0	6.0
RM075M025	M75	M25	80.0	90.0	15.0	15.0	6.0
RM075M032	M75	M32	80.0	90.0	15.0	15.0	6.0
RM075M040	M75	M40	80.0	90.0	15.0	15.0	6.0
RM075M050	M75	M50	80.0	90.0	15.0	15.0	6.0
RM075M063	M75	M63	80.0	90.0	15.0	15.0	6.0
RM080M016	M80	M16	85.0	95.6	20.0	15.0	6.0
RM080M020	M80	M20	85.0	95.6	20.0	15.0	6.0
RM080M025	M80	M25	85.0	95.6	20.0	15.0	6.0
RM080M032	M80	M32	85.0	95.6	20.0	15.0	6.0
RM080M040	M80	M40	85.0	95.6	20.0	15.0	6.0
RM080M050	M80	M50	85.0	95.6	20.0	15.0	6.0
RM080M063	M80	M63	85.0	95.6	20.0	15.0	6.0
RM080M075	M80	M75	85.0	95.6	20.0	15.0	6.0
RM090M016	M90	M16	96.0	108.0	20.0	15.0	6.0
RM090M020	M90	M20	96.0	108.0	20.0	15.0	6.0
RM090M025	M90	M25	96.0	108.0	20.0	15.0	6.0
RM090M032	M90	M32	96.0	108.0	20.0	15.0	6.0
RM090M040	M90	M40	96.0	108.0	20.0	15.0	6.0
RM090M050	M90	M50	96.0	108.0	20.0	15.0	6.0
RM090M063	M90	M63	96.0	108.0	20.0	15.0	6.0
RM090M075	M90	M75	96.0	108.0	20.0	15.0	6.0
RM090M080	M90	M80	96.0	108.0	20.0	20.0	6.0
RM100M016	M100	M16	111.0	124.9	20.0	15.0	6.0
RM100M020	M100	M20	111.0	124.9	20.0	15.0	6.0
RM100M025	M100	M25	111.0	124.9	20.0	15.0	6.0
RM100M032	M100	M32	111.0	124.9	20.0	15.0	6.0
RM100M040	M100	M40	111.0	124.9	20.0	15.0	6.0
RM100M050	M100	M50	111.0	124.9	20.0	15.0	6.0
RM100M063	M100	M63	111.0	124.9	20.0	15.0	6.0
RM100M075	M100	M75	111.0	124.9	20.0	15.0	6.0
RM100M080	M100	M80	111.0	124.9	20.0	20.0	6.0
RM100M090	M100	M90	111.0	124.9	20.0	20.0	6.0

All dimensions are in mm.

CCG CABLE TERMINATIONS

NPT TO NPT, METRIC AND BSP REDUCER

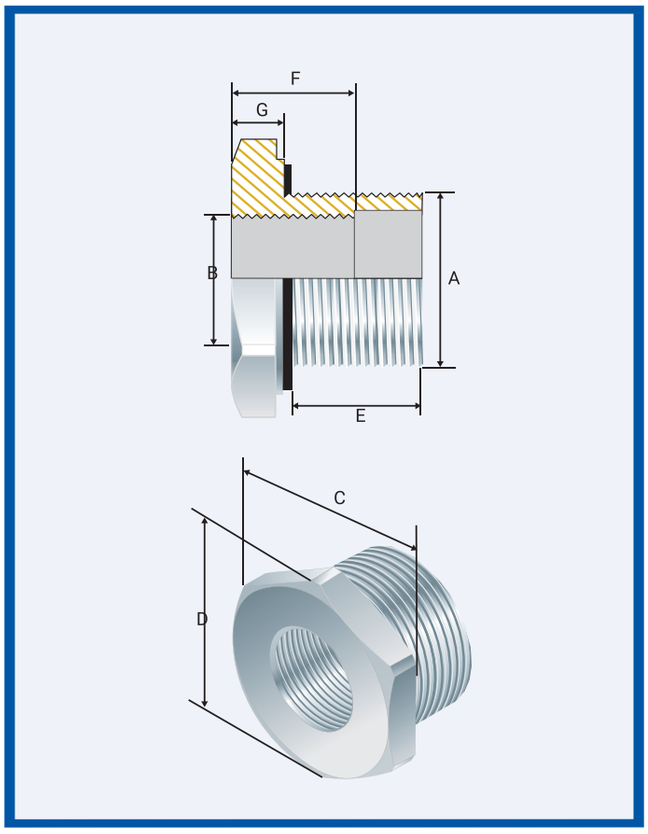

NPT TO NPT

Product Code	Male NPT Thread "A"	Female NPT Thread "B"	Hex Across Flats Min "C"	Hex Across Corners Min "D"	Male Thread Depth Min "E"	Female Thread Depth Min "F"	Hex Length Min "G"
RN034N012	¾ NPT	½ NPT	27.0	30.4	15.0	15.0	6.0
RN001N012	1 NPT	½ NPT	35.0	39.4	19.0	15.0	6.0
RN001N034	1 NPT	¾ NPT	35.0	39.4	19.0	15.0	6.0
RN114N012	1¼ NPT	½ NPT	42.0	47.3	19.0	15.0	6.0
RN114N034	1¼ NPT	¾ NPT	42.0	47.3	19.0	15.0	6.0
RN114N001	1¼ NPT	1 NPT	42.0	47.3	19.0	18.0	6.0
RN112N012	1½ NPT	½ NPT	48.0	54.0	21.0	15.0	6.0
RN112N034	1½ NPT	¾ NPT	48.0	54.0	21.0	15.0	6.0
RN112N001	1½ NPT	1 NPT	48.0	54.0	21.0	18.0	6.0
RN112N114	1½ NPT	1¼ NPT	48.0	54.0	21.0	19.0	6.0
RN002N012	2 NPT	½ NPT	65.0	73.1	21.0	15.0	6.0
RN002N034	2 NPT	¾ NPT	65.0	73.1	21.0	15.0	6.0
RN002N001	2 NPT	1 NPT	65.0	73.1	21.0	18.0	6.0
RN002N114	2 NPT	1¼ NPT	65.0	73.1	21.0	19.0	6.0
RN002N112	2 NPT	1½ NPT	65.0	73.1	21.0	19.0	6.0
RN212N012	2½ NPT	½ NPT	75.0	84.4	30.0	15.0	6.0
RN212N034	2½ NPT	¾ NPT	75.0	84.4	30.0	15.0	6.0
RN212N001	2½ NPT	1 NPT	75.0	84.4	30.0	18.0	6.0
RN212N114	2½ NPT	1¼ NPT	75.0	84.4	30.0	19.0	6.0
RN212N112	2½ NPT	1½ NPT	75.0	84.4	30.0	19.0	6.0
RN212N002	2½ NPT	2 NPT	75.0	84.4	30.0	19.0	6.0
RN003N012	3 NPT	½ NPT	90.0	101.3	32.0	15.0	6.0
RN003N034	3 NPT	¾ NPT	90.0	101.3	32.0	15.0	6.0
RN003N001	3 NPT	1 NPT	90.0	101.3	32.0	18.0	6.0
RN003N114	3 NPT	1¼ NPT	90.0	101.3	32.0	19.0	6.0
RN003N112	3 NPT	1½ NPT	90.0	101.3	32.0	19.0	6.0
RN003N002	3 NPT	2 NPT	90.0	101.3	32.0	19.0	6.0
RN003N212	3 NPT	2½ NPT	90.0	101.3	32.0	25.0	6.0
RN312N012	3½ NPT	½ NPT	102.0	114.8	33.0	15.0	6.0
RN312N034	3½ NPT	¾ NPT	102.0	114.8	33.0	15.0	6.0
RN312N001	3½ NPT	1 NPT	102.0	114.8	33.0	18.0	6.0
RN312N114	3½ NPT	1¼ NPT	102.0	114.8	33.0	19.0	6.0
RN312N112	3½ NPT	1½ NPT	102.0	114.8	33.0	19.0	6.0
RN312N002	3½ NPT	2 NPT	102.0	114.8	33.0	19.0	6.0
RN312N212	3½ NPT	2½ NPT	102.0	114.8	33.0	25.0	6.0
RN312N003	3½ NPT	3 NPT	102.0	114.8	33.0	27.0	6.0
RN004N012	4 NPT	½ NPT	115.0	129.4	34.0	15.0	6.0
RN004N034	4 NPT	¾ NPT	115.0	129.4	34.0	15.0	6.0
RN004N001	4 NPT	1 NPT	115.0	129.4	34.0	18.0	6.0
RN004N114	4 NPT	1¼ NPT	115.0	129.4	34.0	19.0	6.0
RN004N112	4 NPT	1½ NPT	115.0	129.4	34.0	19.0	6.0
RN004N002	4 NPT	2 NPT	115.0	129.4	34.0	19.0	6.0
RN004N212	4 NPT	2½ NPT	115.0	129.4	34.0	25.0	6.0
RN004N003	4 NPT	3 NPT	115.0	129.4	34.0	27.0	6.0
RN004N312	4 NPT	3½ NPT	115.0	129.4	34.0	29.0	6.0

All dimensions except NPT are in mm.

NPT TO METRIC

Product Code	Male NPT Thread "A"	Female Metric Thread "B"	Hex Across Flats Min "C"	Hex Across Corners Min "D"	Male Thread Depth Min "E"	Female Thread Depth Min "F"	Hex Length Min "G"
RN012M016	½ NPT	M16	27.0	30.4	15.0	15.0	6.0
RN034M016	¾ NPT	M16	27.0	30.4	15.0	15.0	6.0
RN034M020	¾ NPT	M20	27.0	30.4	15.0	15.0	6.0
RN001M016	1 NPT	M16	35.0	39.4	19.0	15.0	6.0
RN001M020	1 NPT	M20	35.0	39.4	19.0	15.0	6.0
RN001M025	1 NPT	M25	42.0	47.3	19.0	15.0	6.0
RN114M016	1¼ NPT	M16	42.0	47.3	19.0	15.0	6.0
RN114M020	1¼ NPT	M20	42.0	47.3	19.0	15.0	6.0
RN114M025	1¼ NPT	M25	42.0	47.3	19.0	15.0	6.0
RN114M032	1¼ NPT	M32	42.0	47.3	19.0	15.0	6.0
RN112M016	1½ NPT	M16	48.0	54.0	21.0	15.0	6.0
RN112M020	1½ NPT	M20	48.0	54.0	21.0	15.0	6.0
RN112M025	1½ NPT	M25	48.0	54.0	21.0	15.0	6.0
RN112M032	1½ NPT	M32	48.0	54.0	21.0	15.0	6.0
RN112M040	1½ NPT	M40	48.0	54.0	21.0	15.0	6.0
RN002M016	2 NPT	M16	65.0	73.1	21.0	15.0	6.0
RN002M020	2 NPT	M20	65.0	73.1	21.0	15.0	6.0
RN002M025	2 NPT	M25	65.0	73.1	21.0	15.0	6.0
RN002M032	2 NPT	M32	65.0	73.1	21.0	15.0	6.0
RN002M040	2 NPT	M40	65.0	73.1	21.0	15.0	6.0
RN002M050	2 NPT	M50	65.0	73.1	21.0	15.0	6.0
RN212M016	2½ NPT	M16	75.0	84.4	30.0	15.0	6.0
RN212M020	2½ NPT	M20	75.0	84.4	30.0	15.0	6.0
RN212M025	2½ NPT	M25	75.0	84.4	30.0	15.0	6.0
RN212M032	2½ NPT	M32	75.0	84.4	30.0	15.0	6.0
RN212M040	2½ NPT	M40	75.0	84.4	30.0	15.0	6.0
RN212M050	2½ NPT	M50	75.0	84.4	30.0	15.0	6.0
RN212M063	2½ NPT	M63	75.0	84.4	30.0	15.0	6.0
RN003M016	3 NPT	M16	90.0	101.3	32.0	15.0	6.0
RN003M020	3 NPT	M20	90.0	101.3	32.0	15.0	6.0
RN003M025	3 NPT	M25	90.0	101.3	32.0	15.0	6.0
RN003M032	3 NPT	M32	90.0	101.3	32.0	15.0	6.0
RN003M040	3 NPT	M40	90.0	101.3	32.0	15.0	6.0
RN003M050	3 NPT	M50	90.0	101.3	32.0	15.0	6.0
RN003M063	3 NPT	M63	90.0	101.3	32.0	15.0	6.0
RN003M075	3 NPT	M75	90.0	101.3	32.0	15.0	6.0
RN312M016	3½ NPT	M16	102.0	114.8	33.0	15.0	6.0
RN312M020	3½ NPT	M20	102.0	114.8	33.0	15.0	6.0
RN312M025	3½ NPT	M25	102.0	114.8	33.0	15.0	6.0
RN312M032	3½ NPT	M32	102.0	114.8	33.0	15.0	6.0
RN312M040	3½ NPT	M40	102.0	114.8	33.0	15.0	6.0
RN312M050	3½ NPT	M50	102.0	114.8	33.0	15.0	6.0
RN312M063	3½ NPT	M63	102.0	114.8	33.0	15.0	6.0
RN312M075	3½ NPT	M75	102.0	114.8	33.0	15.0	6.0
RN312M080	3½ NPT	M80	102.0	114.8	33.0	20.0	6.0
RN004M016	4 NPT	M16	115.0	129.4	34.0	15.0	6.0
RN004M020	4 NPT	M20	115.0	129.4	34.0	15.0	6.0
RN004M025	4 NPT	M25	115.0	129.4	34.0	15.0	6.0
RN004M032	4 NPT	M32	115.0	129.4	34.0	15.0	6.0
RN004M040	4 NPT	M40	115.0	129.4	34.0	15.0	6.0
RN004M050	4 NPT	M50	115.0	129.4	34.0	15.0	6.0
RN004M063	4 NPT	M63	115.0	129.4	34.0	15.0	6.0
RN004M075	4 NPT	M75	115.0	129.4	34.0	15.0	6.0
RN004M080	4 NPT	M80	115.0	129.4	34.0	20.0	6.0
RN004M090	4 NPT	M90	115.0	129.4	34.0	20.0	6.0

All dimensions except NPT are in mm.

NPT TO BSP

Product Code	Male NPT Thread "A"	Female BSP Thread "B"	Hex Across Flats Min "C"	Hex Across Corners Min "D"	Male Thread Depth Min "E"	Female Thread Depth Min "F"	Hex Length Min "G"
RN034B012	¾ NPT	½ BSP	27.0	30.4	15.0	16.0	6.0
RN001B012	1 NPT	½ BSP	35.0	39.4	19.0	16.0	6.0
RN001B034	1 NPT	¾ BSP	35.0	39.4	19.0	16.0	6.0
RN114B012	1¼ NPT	½ BSP	42.0	47.3	19.0	16.0	6.0
RN114B034	1¼ NPT	¾ BSP	42.0	47.3	19.0	16.0	6.0
RN114B001	1¼ NPT	1 BSP	42.0	47.3	19.0	18.0	6.0
RN112B012	1½ NPT	½ BSP	48.0	54.0	21.0	16.0	6.0
RN112B034	1½ NPT	¾ BSP	48.0	54.0	21.0	16.0	6.0
RN112B001	1½ NPT	1 BSP	48.0	54.0	21.0	18.0	6.0
RN112B114	1½ NPT	1¼ BSP	48.0	54.0	21.0	18.0	6.0
RN002B012	2 NPT	½ BSP	65.0	73.1	21.0	16.0	6.0
RN002B034	2 NPT	¾ BSP	65.0	73.1	21.0	16.0	6.0
RN002B001	2 NPT	1 BSP	65.0	73.1	21.0	18.0	6.0
RN002B114	2 NPT	1¼ BSP	65.0	73.1	21.0	18.0	6.0
RN002B112	2 NPT	1½ BSP	65.0	73.1	21.0	18.0	6.0
RN212B012	2½ NPT	½ BSP	75.0	84.4	30.0	16.0	6.0
RN212B034	2½ NPT	¾ BSP	75.0	84.4	30.0	16.0	6.0
RN212B001	2½ NPT	1 BSP	75.0	84.4	30.0	18.0	6.0
RN212B114	2½ NPT	1¼ BSP	75.0	84.4	30.0	18.0	6.0
RN212B112	2½ NPT	1½ BSP	75.0	84.4	30.0	18.0	6.0
RN212B002	2½ NPT	2 BSP	75.0	84.4	30.0	18.0	6.0
RN003B012	3 NPT	½ BSP	90.0	101.3	32.0	16.0	6.0
RN003B034	3 NPT	¾ BSP	90.0	101.3	32.0	16.0	6.0
RN003B001	3 NPT	1 BSP	90.0	101.3	32.0	18.0	6.0
RN003B114	3 NPT	1¼ BSP	90.0	101.3	32.0	18.0	6.0
RN003B112	3 NPT	1½ BSP	90.0	101.3	32.0	18.0	6.0
RN003B002	3 NPT	2 BSP	90.0	101.3	32.0	18.0	6.0
RN003B212	3 NPT	2½ BSP	90.0	101.3	32.0	18.0	6.0
RN312B012	3½ NPT	½ BSP	102.0	114.8	33.0	16.0	6.0
RN312B034	3½ NPT	¾ BSP	102.0	114.8	33.0	16.0	6.0
RN312B001	3½ NPT	1 BSP	102.0	114.8	33.0	18.0	6.0
RN312B114	3½ NPT	1¼ BSP	102.0	114.8	33.0	18.0	6.0
RN312B112	3½ NPT	1½ BSP	102.0	114.8	33.0	18.0	6.0
RN312B002	3½ NPT	2 BSP	102.0	114.8	33.0	18.0	6.0
RN312B212	3½ NPT	2½ BSP	102.0	114.8	33.0	18.0	6.0
RN312B003	3½ NPT	3 BSP	102.0	114.8	33.0	18.0	6.0
RN004B012	4 NPT	½ BSP	115.0	129.4	34.0	16.0	6.0
RN004B034	4 NPT	¾ BSP	115.0	129.4	34.0	16.0	6.0
RN004B001	4 NPT	1 BSP	115.0	129.4	34.0	18.0	6.0
RN004B114	4 NPT	1¼ BSP	115.0	129.4	34.0	18.0	6.0
RN004B112	4 NPT	1½ BSP	115.0	129.4	34.0	18.0	6.0
RN004B002	4 NPT	2 BSP	115.0	129.4	34.0	18.0	6.0
RN004B212	4 NPT	2½ BSP	115.0	129.4	34.0	18.0	6.0
RN004B003	4 NPT	3 BSP	115.0	129.4	34.0	18.0	6.0
RN004B312	4 NPT	3½ BSP	115.0	129.4	34.0	18.0	6.0

All dimensions exept NPT and BSP are in mm.

2023 © CCG CABLE TERMINATIONS (PTY) LTD

CCG reserves the right to make alterations to the technical data, dimensions, designs and products available without notice. The illustrations cannot be considered binding. Please contact CCG for assistance.

METRIC TO METRIC, NPT AND BSP REDUCER

CCG CABLE TERMINATIONS

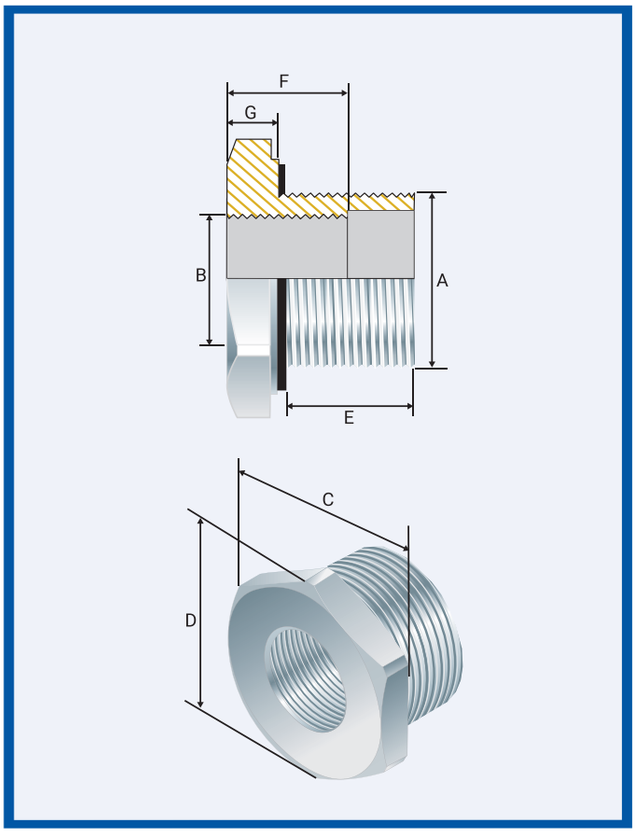

BSP TO BSP

Product Code	Male BSP Thread "A"	Female BSP Thread "B"	Hex Across Flats Min "C"	Hex Across Corners Min "D"	Male Thread Depth Min "E"	Female Thread Depth Min "F"	Hex Length Min "G"
RB034B012	¾ BSP	½ BSP	32.0	36.0	16.0	16.0	6.0
RB001B012	1 BSP	½ BSP	42.0	47.3	18.0	16.0	6.0
RB001B034	1 BSP	¾ BSP	42.0	47.3	18.0	16.0	6.0
RB114B012	1¼ BSP	½ BSP	48.0	54.0	18.0	16.0	6.0
RB114B034	1¼ BSP	¾ BSP	48.0	54.0	18.0	16.0	6.0
RB114B001	1¼ BSP	1 BSP	48.0	54.0	18.0	18.0	6.0
RB112B012	1½ BSP	½ BSP	60.0	67.5	18.0	16.0	6.0
RB112B034	1½ BSP	¾ BSP	60.0	67.5	18.0	16.0	6.0
RB112B001	1½ BSP	1 BSP	60.0	67.5	18.0	18.0	6.0
RB112B114	1½ BSP	1¼ BSP	60.0	67.5	18.0	18.0	6.0
RB002B012	3 BSP	½ BSP	65.0	73.1	18.0	18.0	6.0
RB002B034	2 BSP	¾ BSP	65.0	73.1	18.0	18.0	6.0
RB002B001	2 BSP	1 BSP	65.0	73.1	18.0	18.0	6.0
RB002B114	2 BSP	1¼ BSP	65.0	73.1	18.0	18.0	6.0
RB002B112	2 BSP	1½ BSP	65.0	73.1	18.0	18.0	6.0
RB212B012	2½ BSP	½ BSP	80.0	90.0	18.0	18.0	6.0
RB212B034	2½ BSP	¾ BSP	80.0	90.0	18.0	18.0	6.0
RB212B001	2½ BSP	1 BSP	80.0	90.0	18.0	18.0	6.0
RB212B114	2½ BSP	1¼ BSP	80.0	90.0	18.0	18.0	6.0
RB212B112	2½ BSP	1½ BSP	80.0	90.0	18.0	18.0	6.0
RB212B002	2½ BSP	2 BSP	80.0	90.0	18.0	18.0	6.0
RB003B012	3 BSP	½ BSP	96.0	108.0	18.0	18.0	6.0
RB003B034	3 BSP	¾ BSP	96.0	108.0	18.0	18.0	6.0
RB003B001	3 BSP	1 BSP	96.0	108.0	18.0	18.0	6.0
RB003B114	3 BSP	1¼ BSP	96.0	108.0	18.0	18.0	6.0
RB003B112	3 BSP	1½ BSP	96.0	108.0	18.0	18.0	6.0
RB003B002	3 BSP	2 BSP	96.0	108.0	18.0	18.0	6.0
RB003B212	3 BSP	2½ BSP	96.0	108.0	18.0	18.0	6.0
RB312B012	3½ BSP	½ BSP	111.0	124.9	18.0	18.0	6.0
RB312B034	3½ BSP	¾ BSP	111.0	124.9	18.0	18.0	6.0
RB312B001	3½ BSP	1 BSP	111.0	124.9	18.0	18.0	6.0
RB312B114	3½ BSP	1¼ BSP	111.0	124.9	18.0	18.0	6.0
RB312B112	3½ BSP	1½ BSP	111.0	124.9	18.0	18.0	6.0
RB312B002	3½ BSP	2 BSP	111.0	124.9	18.0	18.0	6.0
RB312B212	3½ BSP	2½ BSP	111.0	124.9	18.0	18.0	6.0
RB312B003	3½ BSP	3 BSP	111.0	124.9	18.0	18.0	6.0
RB004B012	4 BSP	½ BSP	125.0	140.6	18.0	18.0	6.0
RB004B034	4 BSP	¾ BSP	125.0	140.6	18.0	18.0	6.0
RB004B001	4 BSP	1 BSP	125.0	140.6	18.0	18.0	6.0
RB004B114	4 BSP	1¼ BSP	125.0	140.6	18.0	18.0	6.0
RB004B112	4 BSP	1½ BSP	125.0	140.6	18.0	18.0	6.0
RB004B002	4 BSP	2 BSP	125.0	140.6	18.0	18.0	6.0
RB004B212	4 BSP	2½ BSP	125.0	140.6	18.0	18.0	6.0
RB004B003	4 BSP	3 BSP	125.0	140.6	18.0	18.0	6.0
RB004B312	4 BSP	3½ BSP	125.0	140.6	18.0	18.0	6.0

All dimensions except BSP are in mm.

BSP TO METRIC

Product Code	Male BSP Thread "A"	Female Metric Thread "B"	Hex Across Flats Min "C"	Hex Across Corners Min "D"	Male Thread Depth Min "E"	Female Thread Depth Min "F"	Hex Length Min "G"
RB012M016	½ BSP	M16	27.0	30.4	16.0	15.0	6.0
RB034M016	¾ BSP	M16	32.0	36.0	16.0	15.0	6.0
RB034M020	¾ BSP	M20	32.0	36.0	16.0	15.0	6.0
RB001M016	1 BSP	M16	42.0	47.3	18.0	15.0	6.0
RB001M020	1 BSP	M20	42.0	47.3	18.0	15.0	6.0
RB001M025	1 BSP	M25	42.0	47.3	18.0	15.0	6.0
RB114M016	1¼ BSP	M16	48.0	54.0	18.0	15.0	6.0
RB114M020	1¼ BSP	M20	48.0	54.0	18.0	15.0	6.0
RB114M025	1¼ BSP	M25	48.0	54.0	18.0	15.0	6.0
RB114M032	1¼ BSP	M32	48.0	54.0	18.0	15.0	6.0
RB112M016	1½ BSP	M16	60.0	67.5	18.0	15.0	6.0
RB112M020	1½ BSP	M20	60.0	67.5	18.0	15.0	6.0
RB112M025	1½ BSP	M25	60.0	67.5	18.0	15.0	6.0
RB112M032	1½ BSP	M32	60.0	67.5	18.0	15.0	6.0
RB112M040	1½ BSP	M40	60.0	67.5	18.0	15.0	6.0
RB002M016	2 BSP	M16	65.0	73.1	18.0	15.0	6.0
RB002M020	2 BSP	M20	65.0	73.1	18.0	15.0	6.0
RB002M025	2 BSP	M25	65.0	73.1	18.0	15.0	6.0
RB002M032	2 BSP	M32	65.0	73.1	18.0	15.0	6.0
RB002M040	2 BSP	M40	65.0	73.1	18.0	15.0	6.0
RB002M050	2 BSP	M50	65.0	73.1	18.0	15.0	6.0
RB212M016	2½ BSP	M16	80.0	90.0	18.0	15.0	6.0
RB212M020	2½ BSP	M20	80.0	90.0	18.0	15.0	6.0
RB212M025	2½ BSP	M25	80.0	90.0	18.0	15.0	6.0
RB212M032	2½ BSP	M32	80.0	90.0	18.0	15.0	6.0
RB212M040	2½ BSP	M40	80.0	90.0	18.0	15.0	6.0
RB212M050	2½ BSP	M50	80.0	90.0	18.0	15.0	6.0
RB212M063	2½ BSP	M63	80.0	90.0	18.0	15.0	6.0
RB003M016	3 BSP	M16	96.0	108.0	18.0	15.0	6.0
RB003M020	3 BSP	M20	96.0	108.0	18.0	15.0	6.0
RB003M025	3 BSP	M25	96.0	108.0	18.0	15.0	6.0
RB003M032	3 BSP	M32	96.0	108.0	18.0	15.0	6.0
RB003M040	3 BSP	M40	96.0	108.0	18.0	15.0	6.0
RB003M050	3 BSP	M50	96.0	108.0	18.0	15.0	6.0
RB003M063	3 BSP	M63	96.0	108.0	18.0	15.0	6.0
RB003M075	3 BSP	M75	96.0	108.0	18.0	15.0	6.0
RB312M016	3½ BSP	M16	111.0	124.9	18.0	15.0	6.0
RB312M020	3½ BSP	M20	111.0	124.9	18.0	15.0	6.0
RB312M025	3½ BSP	M25	111.0	124.9	18.0	15.0	6.0
RB312M032	3½ BSP	M32	111.0	124.9	18.0	15.0	6.0
RB312M040	3½ BSP	M40	111.0	124.9	18.0	15.0	6.0
RB312M050	3½ BSP	M50	111.0	124.9	18.0	15.0	6.0
RB312M063	3½ BSP	M63	111.0	124.9	18.0	15.0	6.0
RB312M075	3½ BSP	M75	111.0	124.9	18.0	15.0	6.0
RB312M080	3½ BSP	M80	111.0	124.9	18.0	20.0	6.0
RB004M016	4 BSP	M16	125.0	140.6	18.0	15.0	6.0
RB004M020	4 BSP	M20	125.0	140.6	18.0	15.0	6.0
RB004M025	4 BSP	M25	125.0	140.6	18.0	15.0	6.0
RB004M032	4 BSP	M32	125.0	140.6	18.0	15.0	6.0
RB004M040	4 BSP	M40	125.0	140.6	18.0	15.0	6.0
RB004M050	4 BSP	M50	125.0	140.6	18.0	15.0	6.0
RB004M063	4 BSP	M63	125.0	140.6	18.0	15.0	6.0
RB004M075	4 BSP	M75	125.0	140.6	18.0	15.0	6.0
RB004M080	4 BSP	M80	125.0	140.6	18.0	20.0	6.0
RB004M090	4 BSP	M90	125.0	140.6	18.0	20.0	6.0

All dimensions BSP are in mm.

BSP TO NPT

Product Code	Male BSP Thread "A"	Female NPT Thread "B"	Hex Across Flats Min "C"	Hex Across Corners Min "D"	Male Thread Depth Min "E"	Female Thread Depth Min "F"	Hex Length Min "G"
RB034N012	¾ BSP	½ NPT	32.0	36.0	16.0	15.0	6.0
RB001N012	1 BSP	½ NPT	38.0	42.8	18.0	15.0	6.0
RB001N034	1 BSP	¾ NPT	38.0	42.8	18.0	15.0	6.0
RB114N012	1¼ BSP	½ NPT	50.0	56.3	18.0	15.0	6.0
RB114N034	1¼ BSP	¾ NPT	50.0	56.3	18.0	15.0	6.0
RB114N001	1¼ BSP	1 NPT	50.0	56.3	18.0	18.0	6.0
RB112N012	1½ BSP	½ NPT	55.0	61.9	18.0	15.0	6.0
RB112N034	1½ BSP	¾ NPT	55.0	61.9	18.0	15.0	6.0
RB112N001	1½ BSP	1 NPT	55.0	61.9	18.0	18.0	6.0
RB112N114	1½ BSP	1¼ NPT	55.0	61.9	18.0	19.0	6.0
RB002N012	2 BSP	½ NPT	70.0	78.8	18.0	15.0	6.0
RB002N034	2 BSP	¾ NPT	70.0	78.8	18.0	15.0	6.0
RB002N001	2 BSP	1 NPT	70.0	78.8	18.0	18.0	6.0
RB002N114	2 BSP	1¼ NPT	70.0	78.8	18.0	19.0	6.0
RB002N112	2 BSP	1½ NPT	70.0	78.8	18.0	19.0	6.0
RB212N012	2½ BSP	½ NPT	80.0	90.0	18.0	15.0	6.0
RB212N034	2½ BSP	¾ NPT	80.0	90.0	18.0	15.0	6.0
RB212N001	2½ BSP	1 NPT	80.0	90.0	18.0	18.0	6.0
RB212N114	2½ BSP	1¼ NPT	80.0	90.0	18.0	19.0	6.0
RB212N112	2½ BSP	1½ NPT	80.0	90.0	18.0	19.0	6.0
RB212N002	2½ BSP	2 NPT	80.0	90.0	18.0	19.0	6.0
RB003N012	3 BSP	½ NPT	96.0	108.0	18.0	15.0	6.0
RB003N034	3 BSP	¾ NPT	96.0	108.0	18.0	15.0	6.0
RB003N001	3 BSP	1 NPT	96.0	108.0	18.0	18.0	6.0
RB003N114	3 BSP	1¼ NPT	96.0	108.0	18.0	19.0	6.0
RB003N112	3 BSP	1½ NPT	96.0	108.0	18.0	19.0	6.0
RB003N002	3 BSP	2 NPT	96.0	108.0	18.0	19.0	6.0
RB003N212	3 BSP	2½ NPT	96.0	108.0	18.0	25.0	6.0
RB312N012	3½ BSP	½ NPT	111.0	124.9	18.0	15.0	6.0
RB312N034	3½ BSP	¾ NPT	111.0	124.9	18.0	15.0	6.0
RB312N001	3½ BSP	1 NPT	111.0	124.9	18.0	18.0	6.0
RB312N114	3½ BSP	1¼ NPT	111.0	124.9	18.0	19.0	6.0
RB312N112	3½ BSP	1½ NPT	111.0	124.9	18.0	19.0	6.0
RB312N002	3½ BSP	2 NPT	111.0	124.9	18.0	19.0	6.0
RB312N212	3½ BSP	2½ NPT	111.0	124.9	18.0	25.0	6.0
RB312N003	3½ BSP	3 NPT	111.0	124.9	18.0	27.0	6.0
RB004N012	4 BSP	½ NPT	125.0	140.6	18.0	15.0	6.0
RB004N034	4 BSP	¾ NPT	125.0	140.6	18.0	15.0	6.0
RB004N001	4 BSP	1 NPT	125.0	140.6	18.0	18.0	6.0
RB004N114	4 BSP	1¼ NPT	125.0	140.6	18.0	19.0	6.0
RB004N112	4 BSP	1½ NPT	125.0	140.6	18.0	19.0	6.0
RB004N002	4 BSP	2 NPT	125.0	140.6	18.0	19.0	6.0
RB004N212	4 BSP	2½ NPT	125.0	140.6	18.0	25.0	6.0
RB004N003	4 BSP	3 NPT	125.0	140.6	18.0	27.0	6.0
RB004N312	4 BSP	3½ NPT	125.0	140.6	18.0	29.0	6.0

All dimensions BSP to NPT are in mm.

ai1676289420154_Reducer_RD010323.pdf 5 2023/02/13 13:57

CCG CABLE TERMINATIONS

IP AND CONDUIT REDUCER

METRIC IP REDUCER

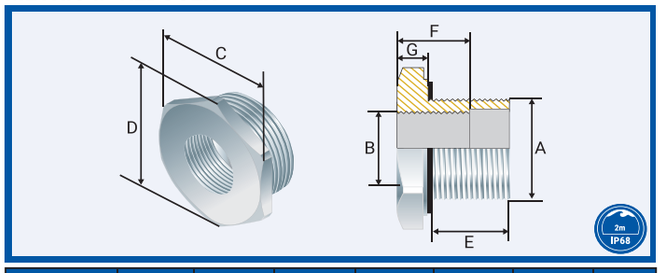

Product Code	Male Metric Thread "A"	Female Metric Thread "B"	Hex Across Flats Min "C"	Hex Across Corners Min "D"	Male Thread Depth Min "E"	Female Thread Depth Min "F"	Hex Length Min "G"
RM020M016IP	M20	M16	27.0	30.4	12.0	10.0	6.0
RM025M016IP	M25	M16	32.0	36.0	12.0	10.0	6.0
RM025M020IP	M25	M20	32.0	36.0	12.0	15.0	6.0
RM032M016IP	M32	M16	38.0	42.8	12.0	15.0	6.0
RM032M020IP	M32	M20	38.0	42.8	12.0	15.0	6.0
RM032M025IP	M32	M25	38.0	42.8	12.0	15.0	6.0
RM040M016IP	M40	M16	47.0	52.9	12.0	15.0	6.0
RM040M020IP	M40	M20	47.0	52.9	12.0	15.0	6.0
RM040M025IP	M40	M25	47.0	52.9	12.0	15.0	6.0
RM040M032IP	M40	M32	47.0	52.9	12.0	15.0	6.0
RM050M016IP	M50	M16	60.0	67.5	12.0	15.0	6.0
RM050M020IP	M50	M20	60.0	67.5	12.0	15.0	6.0
RM050M025IP	M50	M25	60.0	67.5	12.0	15.0	6.0
RM050M032IP	M50	M32	60.0	67.5	12.0	15.0	6.0
RM050M040IP	M50	M40	60.0	67.5	12.0	15.0	6.0
RM063M016IP	M63	M16	70.0	78.8	12.0	15.0	6.0
RM063M020IP	M63	M20	70.0	78.8	12.0	15.0	6.0
RM063M025IP	M63	M25	70.0	78.8	12.0	15.0	6.0
RM063M032IP	M63	M32	70.0	78.8	12.0	15.0	6.0
RM063M040IP	M63	M40	70.0	78.8	12.0	15.0	6.0
RM063M050IP	M63	M50	70.0	78.8	12.0	15.0	6.0
RM075M016IP	M75	M16	85.0	95.6	12.0	15.0	6.0
RM075M020IP	M75	M20	85.0	95.6	12.0	15.0	6.0
RM075M025IP	M75	M25	85.0	95.6	12.0	15.0	6.0
RM075M032IP	M75	M32	85.0	95.6	12.0	15.0	6.0
RM075M040IP	M75	M40	85.0	95.6	12.0	15.0	6.0
RM075M050IP	M75	M50	85.0	95.6	12.0	15.0	6.0
RM075M063IP	M75	M63	85.0	95.6	12.0	15.0	6.0
RM080M016IP	M80	M16	90.0	101.3	16.0	15.0	6.0
RM080M020IP	M80	M20	90.0	101.3	16.0	15.0	6.0
RM080M025IP	M80	M25	90.0	101.3	16.0	15.0	6.0
RM080M032IP	M80	M32	90.0	101.3	16.0	15.0	6.0
RM080M040IP	M80	M40	90.0	101.3	16.0	15.0	6.0
RM080M050IP	M80	M50	90.0	101.3	16.0	15.0	6.0
RM080M063IP	M80	M63	90.0	101.3	16.0	15.0	6.0
RM080M075IP	M80	M75	90.0	101.3	16.0	15.0	6.0
RM090M016IP	M90	M16	96.0	108.0	16.0	15.0	6.0
RM090M020IP	M90	M20	96.0	108.0	16.0	15.0	6.0
RM090M025IP	M90	M25	96.0	108.0	16.0	15.0	6.0
RM090M032IP	M90	M32	96.0	108.0	16.0	15.0	6.0
RM090M040IP	M90	M40	96.0	108.0	16.0	15.0	6.0
RM090M050IP	M90	M50	96.0	108.0	16.0	15.0	6.0
RM090M063IP	M90	M63	96.0	108.0	16.0	15.0	6.0
RM090M075IP	M90	M75	96.0	108.0	16.0	15.0	6.0
RM090M080IP	M90	M80	96.0	108.0	16.0	20.0	6.0
RM100M016IP	M100	M16	111.0	124.9	16.0	15.0	6.0
RM100M020IP	M100	M20	111.0	124.9	16.0	15.0	6.0
RM100M025IP	M100	M25	111.0	124.9	16.0	15.0	6.0
RM100M032IP	M100	M32	111.0	124.9	16.0	15.0	6.0
RM100M040IP	M100	M40	111.0	124.9	16.0	15.0	6.0
RM100M050IP	M100	M50	111.0	124.9	16.0	15.0	6.0
RM100M063IP	M100	M63	111.0	124.9	16.0	15.0	6.0
RM100M075IP	M100	M75	111.0	124.9	16.0	15.0	6.0
RM100M080IP	M100	M80	111.0	124.9	16.0	20.0	6.0
RM100M090IP	M100	M90	111.0	124.9	16.0	20.0	6.0

All dimensions are in mm.

CONDUIT REDUCER

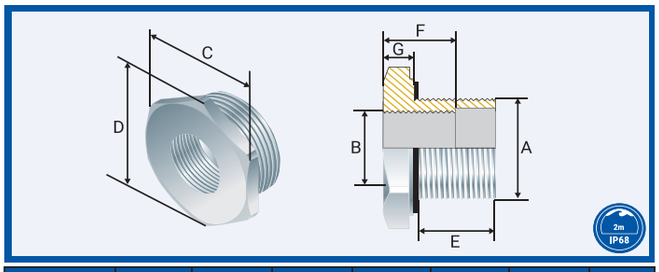

Product Code	Male Metric Thread "A"	Female Metric Thread "B"	Hex Across Flats Min "C"	Hex Across Corners Min "D"	Male Thread Depth Min "E"	Female Thread Depth Min "F"	Hex Length Min "G"
RM020M016S	M20	M16	24.0	27.0	10.0	8.0	5.0
RM025M016S	M25	M16	27.0	30.4	10.0	8.0	5.0
RM025M020S	M25	M20	27.0	30.4	10.0	8.0	5.0
RM032M016S	M32	M16	32.0	36.0	10.0	8.0	5.0
RM032M020S	M32	M20	32.0	36.0	10.0	8.0	5.0
RM032M025S	M32	M25	32.0	36.0	10.0	8.0	5.0
RM040M016S	M40	M16	42.0	47.3	10.0	8.0	6.0
RM040M020S	M40	M20	42.0	47.3	10.0	8.0	6.0
RM040M025S	M40	M25	42.0	47.3	10.0	8.0	6.0
RM040M032S	M40	M32	42.0	47.3	10.0	8.0	6.0
RM050M016S	M50	M16	50.0	56.3	10.0	8.0	6.0
RM050M020S	M50	M20	50.0	56.3	10.0	8.0	6.0
RM050M025S	M50	M25	50.0	56.3	10.0	8.0	6.0
RM050M032S	M50	M32	50.0	56.3	10.0	8.0	6.0
RM050M040S	M50	M40	50.0	56.3	10.0	8.0	6.0
RM063M016S	M63	M16	65.0	73.1	10.0	8.0	6.0
RM063M020S	M63	M20	65.0	73.1	10.0	8.0	6.0
RM063M025S	M63	M25	65.0	73.1	10.0	8.0	6.0
RM063M032S	M63	M32	65.0	73.1	10.0	8.0	6.0
RM063M040S	M63	M40	65.0	73.1	10.0	8.0	6.0
RM063M050S	M63	M50	65.0	73.1	10.0	8.0	6.0
RM075M016S	M75	M16	80.0	90.0	10.0	8.0	8.0
RM075M020S	M75	M20	80.0	90.0	10.0	8.0	8.0
RM075M025S	M75	M25	80.0	90.0	10.0	8.0	8.0
RM075M032S	M75	M32	80.0	90.0	10.0	8.0	8.0
RM075M040S	M75	M40	80.0	90.0	10.0	8.0	8.0
RM075M050S	M75	M50	80.0	90.0	10.0	8.0	8.0
RM075M063S	M75	M63	80.0	90.0	10.0	8.0	8.0
RM080M016S	M80	M16	85.0	95.6	14.0	8.0	8.0
RM080M020S	M80	M20	85.0	95.6	14.0	8.0	8.0
RM080M025S	M80	M25	85.0	95.6	14.0	8.0	8.0
RM080M032S	M80	M32	85.0	95.6	14.0	8.0	8.0
RM080M040S	M80	M40	85.0	95.6	14.0	8.0	8.0
RM080M050S	M80	M50	85.0	95.6	14.0	8.0	8.0
RM080M063S	M80	M63	85.0	95.6	14.0	8.0	8.0
RM080M075S	M80	M75	85.0	95.6	14.0	8.0	8.0
RM090M016S	M90	M16	96.0	108.0	14.0	8.0	8.0
RM090M020S	M90	M20	96.0	108.0	14.0	8.0	8.0
RM090M025S	M90	M25	96.0	108.0	14.0	8.0	8.0
RM090M032S	M90	M32	96.0	108.0	14.0	8.0	8.0
RM090M040S	M90	M40	96.0	108.0	14.0	8.0	8.0
RM090M050S	M90	M50	96.0	108.0	14.0	8.0	8.0
RM090M063S	M90	M63	96.0	108.0	14.0	8.0	8.0
RM090M075S	M90	M75	96.0	108.0	14.0	8.0	8.0
RM090M080S	M90	M80	96.0	108.0	14.0	14.0	8.0
RM100M016S	M100	M16	111.0	124.9	14.0	8.0	8.0
RM100M020S	M100	M20	111.0	124.9	14.0	8.0	8.0
RM100M025S	M100	M25	111.0	124.9	14.0	8.0	8.0
RM100M032S	M100	M32	111.0	124.9	14.0	8.0	8.0
RM100M040S	M100	M40	111.0	124.9	14.0	8.0	8.0
RM100M050S	M100	M50	111.0	124.9	14.0	8.0	8.0
RM100M063S	M100	M63	111.0	124.9	14.0	8.0	8.0
RM100M075S	M100	M75	111.0	124.9	14.0	8.0	8.0
RM100M080S	M100	M80	111.0	124.9	14.0	14.0	8.0
RM100M090S	M100	M90	111.0	124.9	14.0	14.0	8.0

All dimensions are in mm.

PRODUCT CODE STRUCTURE

1st Character denotes the type, R = REDUCER	2nd Character denotes the male thread - **M**etric, **N**PT or **B**SP	3rd to 5th Character denotes the size of the male thread	6th Character denotes the female thread - **M**etric, **N**PT or **B**SP	7th to 9th Character denotes the size of female thread	10th Character denotes the classification - Conduit (**S**), Ingress Protection (**IP**) or Ex (**E**)	Example Product Code
R	**M**	090	**M**	020	**IP**	R**M**090**M**020**IP**

2023 © CCG CABLE TERMINATIONS (PTY) LTD

CCG reserves the right to make alterations to the technical data, dimensions, designs and products available without notice. The illustrations cannot be considered binding. Please contact CCG for assistance.

ai1676289420154_Reducer_RD010323.pdf 6 2023/02/13 13:57

REDUCER SELECTION CHART

CCG CABLE TERMINATIONS

METRIC TO METRIC, BSP/NPT REDUCER SELECTION CHART

FEMALE / MALE	METRIC REDUCER											BSP / NPT REDUCER								
	M16	M20	M25	M32	M40	M50	M63	M75	M80	M90	M100	½"	¾"	1"	1¼"	1½"	2"	2½"	3"	3½"
M20	R											R								
M25	R	R										R	R							
M32	R	R	R									R	R	R						
M40	R	R	R	R								R	R	R	R					
M50	R	R	R	R	R							R	R	R	R	R				
M63	R	R	R	R	R	R						R	R	R	R	R	R			
M75	R	R	R	R	R	R	R					R	R	R	R	R	R	R		
M80	R	R	R	R	R	R	R	R				R	R	R	R	R	R	R	R	
M90	R	R	R	R	R	R	R	R	R			R	R	R	R	R	R	R	R	R
M100	R	R	R	R	R	R	R	R	R	R		R	R	R	R	R	R	R	R	R

BSP/NPT TO METRIC, BSP/NPT REDUCER SELECTION CHART

FEMALE / MALE	METRIC REDUCER										BSP / NPT REDUCER								
	M16	M20	M25	M32	M40	M50	M63	M75	M80	M90	½"	¾"	1"	1¼"	1½"	2"	2½"	3"	3½"
½"BSP/½"NPT	R																		
¾"BSP/¾"NPT	R	R									R								
1"BSP/1"NPT	R	R	R								R	R							
1¼"BSP/1¼"NPT	R	R	R	R							R	R	R						
1½"BSP/1½"NPT	R	R	R	R	R						R	R	R	R					
2"BSP/2"NPT	R	R	R	R	R	R					R	R	R	R	R				
2½"BSP/2½"NPT	R	R	R	R	R	R	R				R	R	R	R	R	R			
3"BSP/3"NPT	R	R	R	R	R	R	R	R			R	R	R	R	R	R	R		
3½"BSP/3½"NPT	R	R	R	R	R	R	R	R	R		R	R	R	R	R	R	R	R	
4"BSP/4"NPT	R	R	R	R	R	R	R	R	R	R	R	R	R	R	R	R	R	R	R

SIZE REFERENCE

Metric Size Reference	NPT Size Reference	BSP Size Reference
M16 x 1.5	-	-
M20 x 1.5	½ / ¾	½ / ¾
M25 x 1.5	¾ / 1	¾ / 1
M32 x 1.5	1 / 1¼	1 / 1¼
M40 x 1.5	1¼ / 1½	1¼ / 1½
M50 x 1.5	1½ / 2	1½ / 2
M63 x 1.5	2 / 2½	2 / 2½
M63 x 1.5	2 / 2½	2 / 2½
M75 x 1.5	2½ / 3	2½ / 3
M75 x 1.5	2½ / 3	2½ / 3
M80 x 2.0	3	3
M90 x 2.0	3 / 3½	3 / 3½
M100 x 2.0	3½ / 4	3½ / 4
M115 x 2.0	4	4
M120 x 2.0	-	-